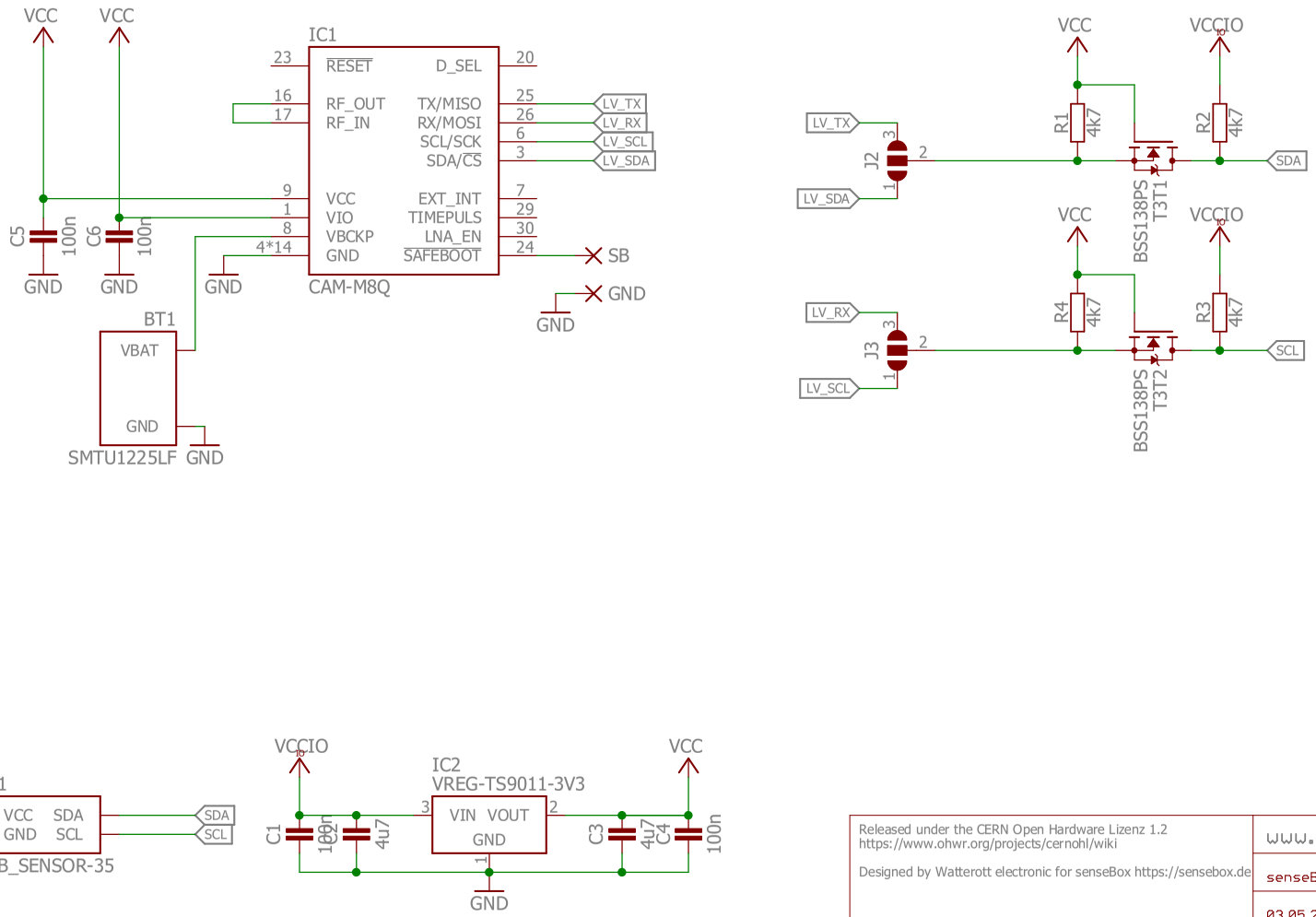

Released under the CERN Open Hardware Lizenz 1.2
https://www.ohwr.org/projects/cernohl/wiki

Designed by Watterott electronic for senseBox https://sensebox.de

www.watterott.com

senseBox-CAM-M8Q_v20

03.05.2018 22:24

Sheet: 1/1

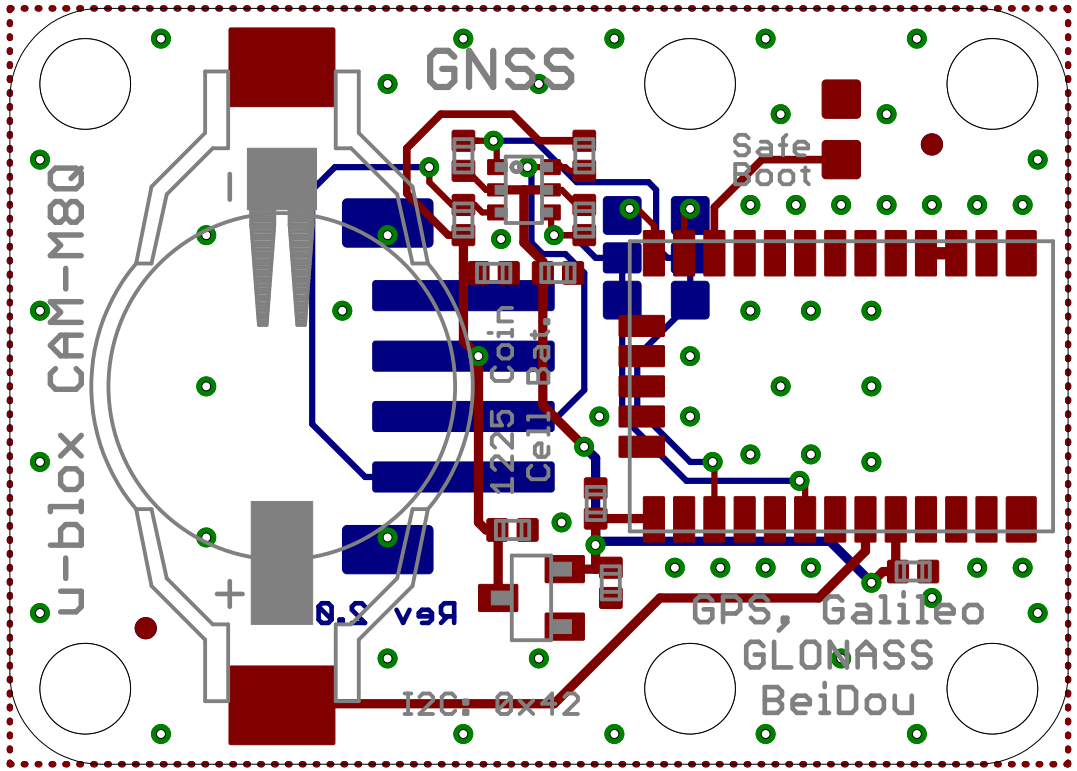
GNSS
u-blox CAM-M8Q
1225 Coin Cell Bat.
Safe Boot
GPS, Galileo
GLONASS
BeiDou
I2C: 0x42
Rev 2.0